PROJECT NO.	SHEET

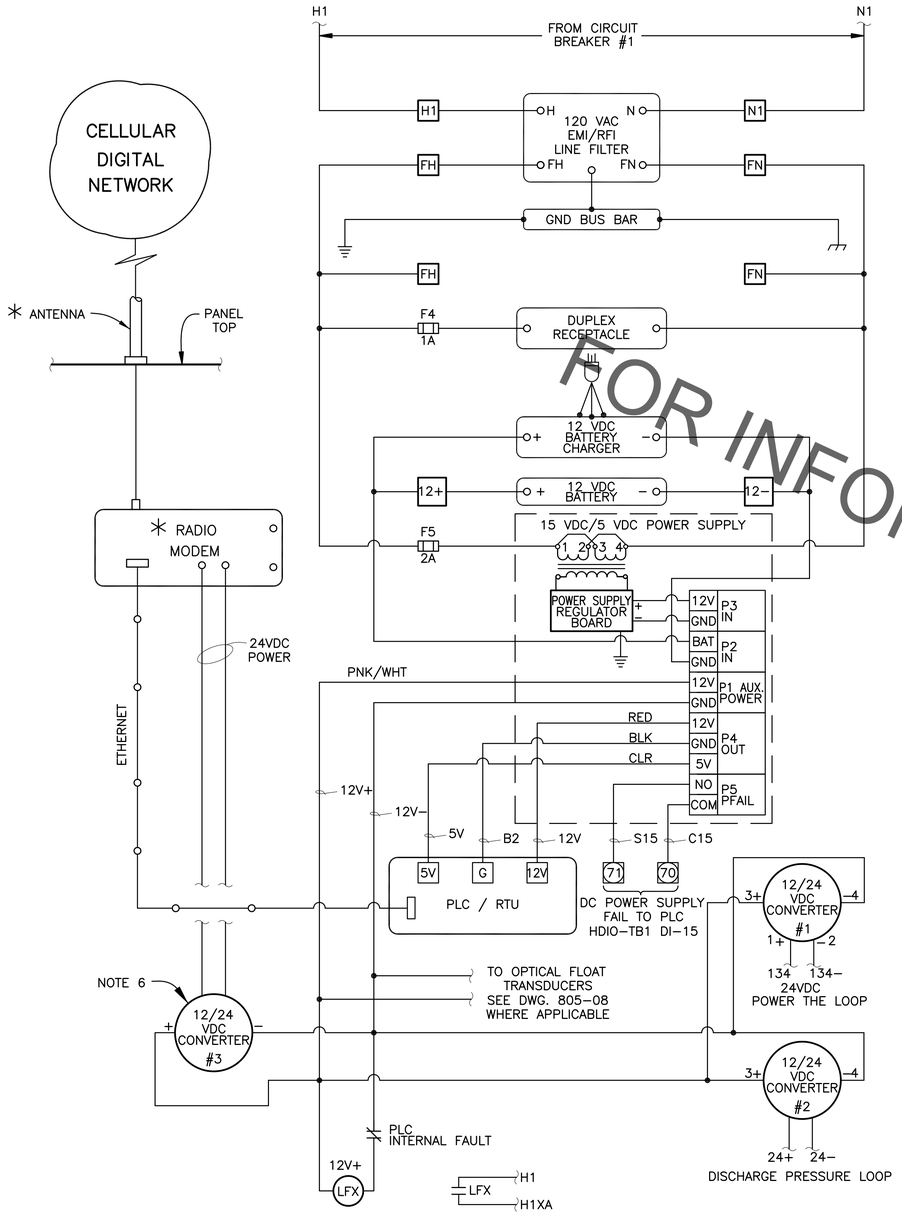

PLC POWER DISTRIBUTION

✳ ANTENNA & RADIO MODEM FURNISHED IN FUTURE.

✳✳ CONTACT CLOSED WHEN CHECK VALVE NOT FULLY OPEN.

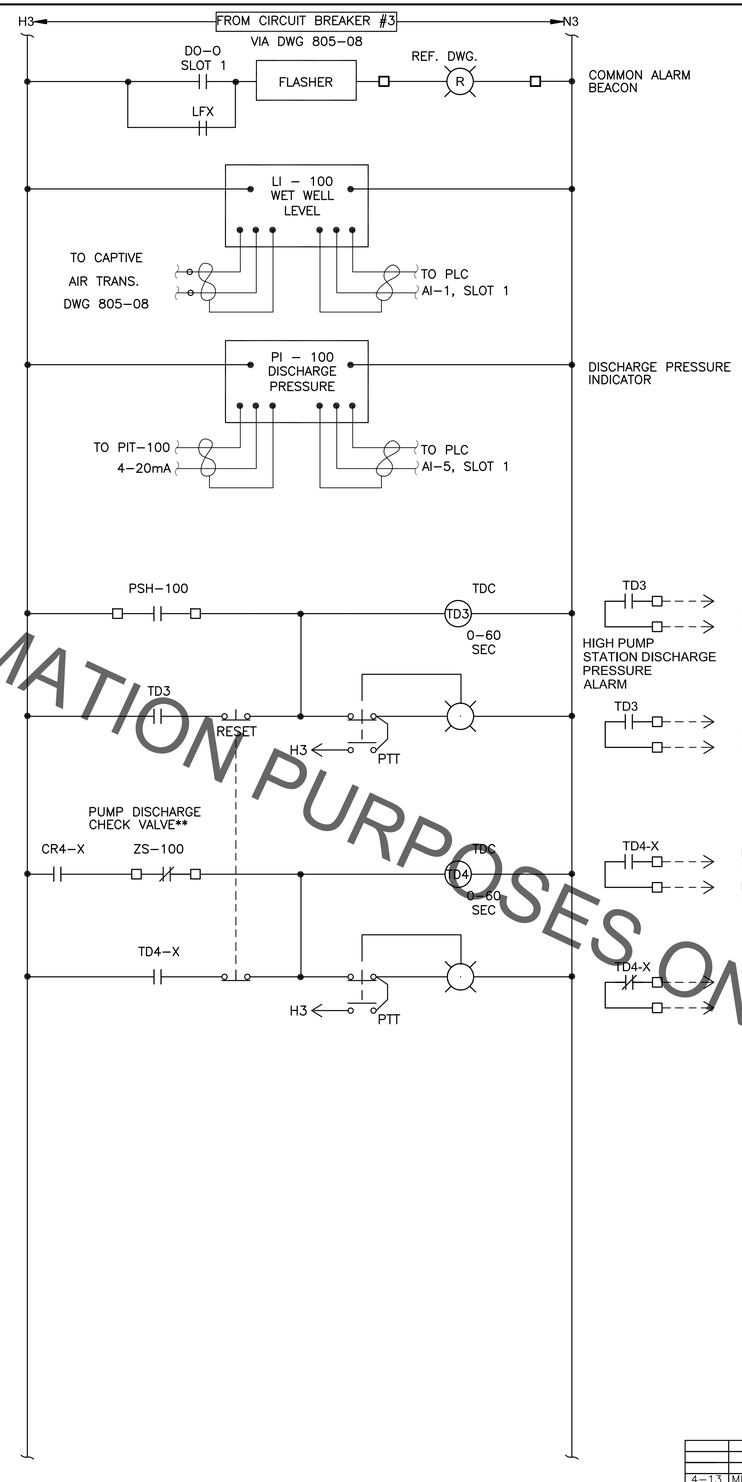

NOTES:

1. PROVIDE EITHER A 24VDC BATTERY CHARGER WITH BATTERIES, 24VDC INTEGRATED UPS, OR 120VAC UPS WITH 24VDC POWER SUPPLY MEETING THE REQUIREMENTS OF UL508. PROVIDE MEANS TO TAP 12V DC FROM THE BATTERY SYSTEM AS NEEDED TO POWER THE RADIO MODEM. CHANGE RADIO MODEM POWER SUPPLY WIRING TO SAID REQUIREMENT.
2. PROVIDE ADEQUATELY SIZED FUSE FOR ALL DC LOADS.
3. ITEMS DENOTED WITH AN ASTERISK (✳) ARE FURNISHED BY OTHERS.
4. TYPICAL FOR PUMP NO. X. X = 1 THRU 3. PUMP MOTOR CONTROLS TYPICAL TO PUMP NO. X = 1. PROVIDE X NUMBER OF RELAYS, LIGHTS, INTERLOCKS AND CONTACTS, ONE FOR EACH PUMP.
5. OPERATOR INTERFACE TO BE INSTALLED ON THE PANEL FRONT DOOR.
6. CONVERTER #3 IS NOT REQUIRED IF THE RADIO MODEM IS RATED FOR 12VDC INPUT POWER SUPPLY.

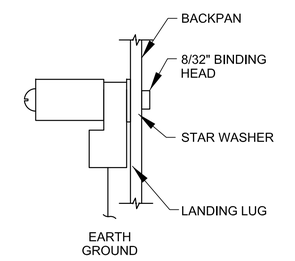

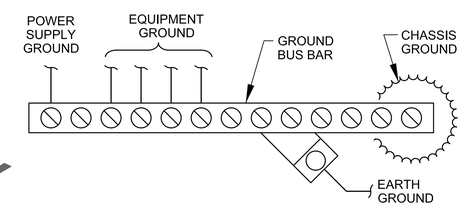

EQUIPMENT GROUNDING DETAIL

NTS

FOR INFORMATION PURPOSES ONLY

STATE OF LOUISIANA
BRYAN K. HARMON
REG. No. 22595
REGISTERED PROFESSIONAL ENGINEER IN CIVIL ENGINEERING

AUGUST 1, 2011

STANDARD PLAN NO.	DATED	SHEET NO.
805−10	AUGUST 1, 2011	1 OF 1

PLC POWER DISTRIBUTION DIAGRAM (TYPE I PUMP STATION)

ENGINEERING DIVISION
DEPARTMENT OF PUBLIC WORKS
CITY OF BATON ROUGE & PARISH OF EAST BATON ROUGE

DESIGNED	DRAWN	CHECKED	APPROVED
A. SCHULZE	G. VANNICE	R. WRIGHT	B. HARMON

DATE	DESCRIPTION REVISIONS	BY
4−13	MISC. REVISIONS	A.S.