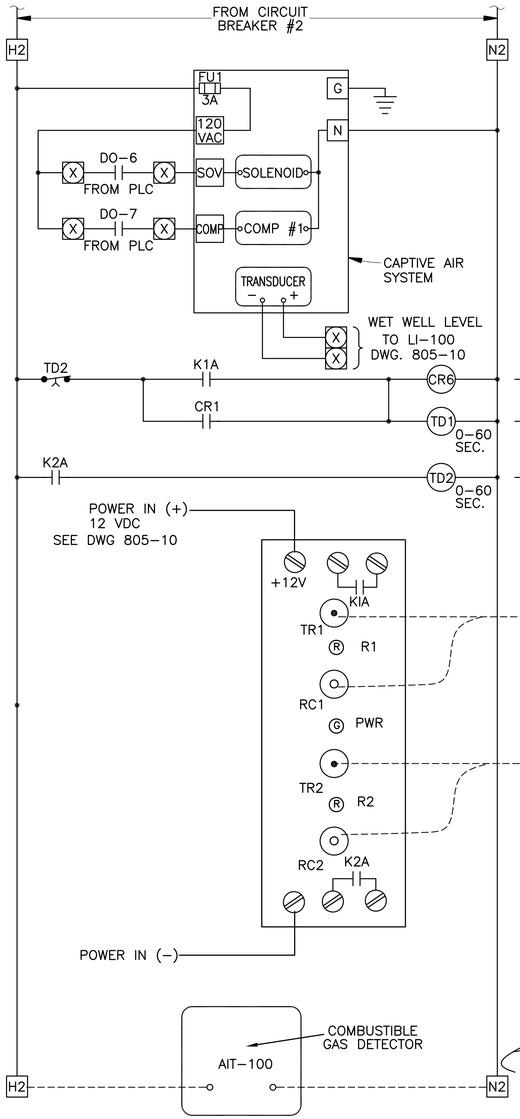

CAPTIVE AIR SYSTEM MISCELLANEOUS WIRING DIAGRAM

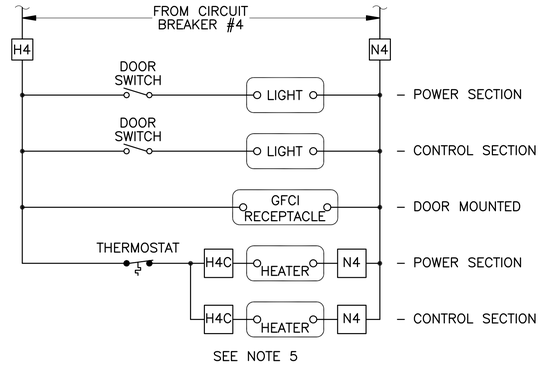

MISCELLANEOUS WIRING DIAGRAM

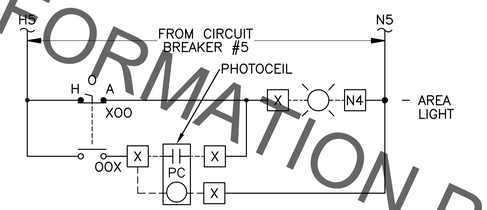

LIGHTING CONTROLS

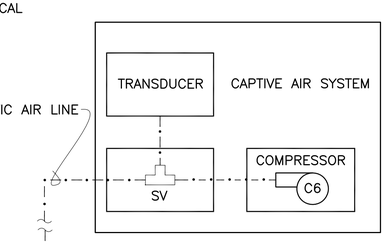

NOTES:

1. COMBUSTIBLE GAS SENSORS INSTALLED IN THE WET WELL AND CONNECTED TO ANALYZERS USING MANUFACTURER SUPPLIED CABLE.
2. AE-100 SUITABLE FOR CLASS-1 DIV-1 LOCATIONS. AIT-100 HOUSED IN NEMA-4X 316 SS ENCLOSURE.
3. PROVIDE CONTROLS TYPICAL TO PUMPS NO.1 AND NO.2 FOR TRIPLEX PUMP STATIONS.
4. WHERE VARIABLE FREQUENCY DRIVES ARE USED, USE CONTROL DIAGRAM ON STANDARD PLAN 805-06.
5. THE QUANTITY OF LIGHTS, RECEPTACLES AND HEATERS IS BASED ON TWO SECTION CONTROL PANEL SHOWN ON DRAWING. ADDITIONAL QUANTITY OF DEVICES AND ASSOCIATED CIRCUITS MAY BE REQUIRED ON LARGER CONTROL PANEL.

CAPTIVE AIR SYSTEM DIAGRAM

AE/AIT-100: COMBUSTIBLE GAS ANALYZER.
MSC: MANUFACTURER SUPPLIED CABLE.

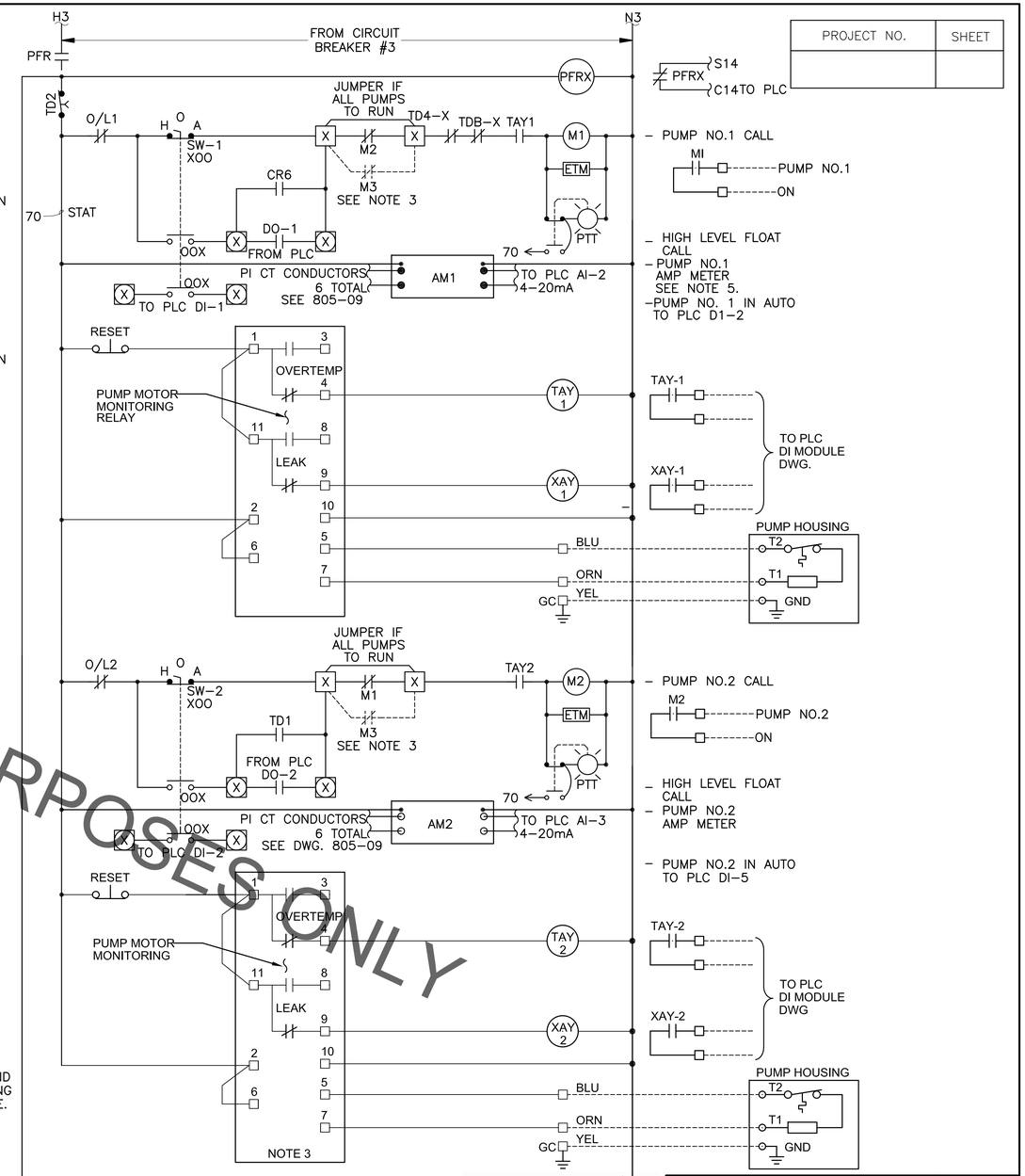

FIX SPEED PUMP CONTROLS

SEE NOTE 4

CONTINUED ON DWG. 805-10

STATE OF LOUISIANA
BRYAN K. HARMON
REG. No. 22595
REGISTERED PROFESSIONAL ENGINEER IN CIVIL ENGINEERING
AUGUST 1, 2011

PROJECT NO.	SHEET

STANDARD PLAN NO.	DATED	SHEET NO.
805-08	AUGUST 1, 2011	1 OF 1

POWER DISTRIBUTION AND PUMP CONTROL DIAGRAM (TYPE I STATION)

ENGINEERING DIVISION
DEPARTMENT OF PUBLIC WORKS
CITY OF BATON ROUGE & PARISH OF EAST BATON ROUGE

DATE	DESCRIPTION	BY
4/13	ADDED (2) CLOSED CONTACTS TO PUMP CONTROL	A.S.

REVISIONS

DESIGNED	DRAWN	CHECKED	APPROVED
A. SCHULZE	G. VANNICE	R. WRIGHT	B. HARMON

FOR INFORMATION PURPOSES ONLY